LIUGONG NORTH AMERICA

925FCR

EXCAVATOR

ENGINE	OPERATING WEIGHT	GROSS POWER	BUCKET CAPACITY	MAX. DIGGING DEPTH
Cummins B6.7	56,218 lb (25,500 kg)	156 hp (116 kW)	1.3 yd³ (1.0 m³)	21 ' 5 " (6,530 mm)

XTRACARE+ WARRANTY

SPECIFICATIONS

ENGINE

Cummins EPA Tier 4 final / EU Stage V, in-line 6-cylinder Variable-Geometry. Turbocharger (VGT), high pressure common rail, electronically controlled direct injection. Air cleaner: Cummins direct flow air filter. Cooling system: Air-to-air intercooler.

Emission rating	EPA Tier 4 Final/EU Stage V
Engine manufacturer	Cummins
Engine model	B6.7
Aspiration	Variable-Geometry Turbocharged (VGT)
Charged air cooling	Aftercooler
Cooling fan drive	Electric motor
Displacement	409 in³ (6.7 L)
Gross power	156 hp (116 kW) @ 2,200 rpm
Net power	156 hp (116 kW) @ 2,200 rpm
Peak torque	550 lbf·ft (746 N·m) @ 1,300 rpm
Cylinder	6 cylinders
Bore × Stroke	4.2" x 4.9" (107 mm × 124 mm)

HYDRAULIC SYSTEM

Main pump, type	Two variable-displacement piston pumps
Main pump, maximum flow	2 x 60 gpm (2 x 228 L/min)
Implement pressure	Normal: 4,980 psi (34.3 MPa) Power boost: 5,370 psi (37 MPa)
Auxiliary 1, one-way pressure	4,350 psi (30 MPa)
Auxiliary 1, two-way pressure	4,350 psi (30 MPa)
Auxiliary 1, maximum flow	119 gpm (450 L/min)
Auxiliary 2, two-way pressure	3,050 psi (21 MPa)
Auxiliary 2, maximum flow	13 gpm (50 L/min)
Slew circuit pressure	4,500 psi (31 MPa)
Travel circuit pressure	4,980 psi (34.3 MPa)
Pilot pump, type	Gear pump
Pilot circuit pressure	510-570 psi (3.5-3.9 MPa)
Pilot pump, maximum flow	4.6 gpm (17.5 L/min)

OPERATING WEIGHT

Operating weight, typical	56,218 lb (25,500 kg)
Operating weight, maximum	62,170 lb (28,200 kg)

SERVICE CAPACITIES

Fuel tank	85 gal (320 L)
Engine oil	7 gal (25 L)
Final drive, each	1.5 gal (5.5 L)
Swing drive	0.9 gal (3.4 L)
Cooling system	7 gal (25 L)
Hydraulic reservoir	48 gal (182 L)
Hydraulic system, total	84.5 gal (320 L)
DEF tank	12 gal (44 L)

UNDERCARRIAGE

Track shoes, each side	49
Link pitch	6.9" (175 mm)
Shoe width, triple grouser	24" (600 mm)
Bottom rollers each side	8
Top rollers each side	2

SWING SYSTEM

Planetary gear reduction driven by high torque axial piston motor, with oil disk brake. Swing parking brake resets within five seconds after swing pilot controls return to neutral.

Swing speed	10.5 rpm
Swing torque	57,530 lbf·ft (78,000 N·m)

DRIVE & BRAKES

2-speed axial piston motors with oil disk brakes.Steering controlled by two detachable hand levers with pedals.

Max. travel speed	High: 3.4 mph (5.4 km/h) Low: 1.9 mph (3.1 km/h)
Gradeability	30°/70%
Max. drawbar Pull	49,460 lbf (220 kN)

ELECTRIC SYSTEM

System voltage	12 V
Batteries	2 x 12 V
Alternator	24 V-180 A
Start motor	24 V-10.5 hp (7.8 kW)

SOUND PERFORMANCE

Interior sound level (ISO 6396)	69 dB(A)
Exterior sound level (ISO 6395)	100 dB(A)

SPECIFICATIONS

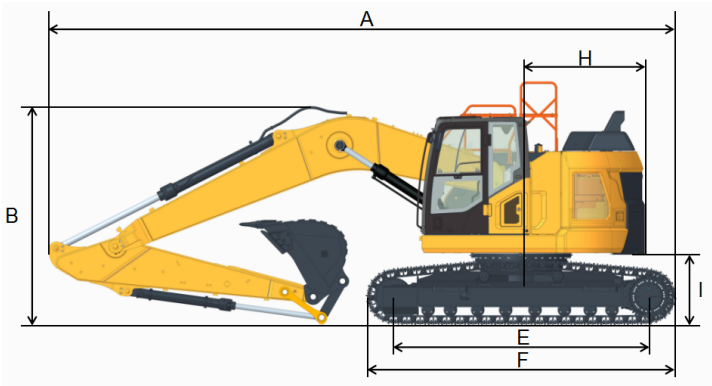

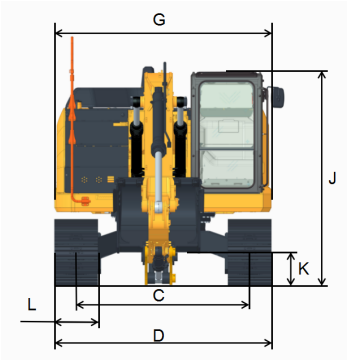

DIMENSIONS

	Boom	18' 9'' (5,710 mm)	
	Stick	7' 10'' (2,400 mm)	9' 7'' (2,915 mm)
A	Shipping length	31' 9'' (9,670 mm)	29' 5'' (8,960 mm)
B	Shipping height – top of boom	10' 4'' (3,150 mm)	10' (3,060 mm)
C	Track gauge	7' 10'' (2,390 mm)	
D	Undercarriage width – 24'' (600 mm) shoes	9' 10'' (2,990 mm)	
	28'' (700 mm) shoes	10' 2'' (3,090 mm)	
	32'' (800 mm) shoes	10' 6'' (3,190 mm)	
	35'' (900 mm) shoes	10' 10'' (3,290 mm)	
E	Length to center of rollers	12' (3,650 mm)	
F	Track length	14' 7'' (4,450 mm)	
G	Overall width of upper structure	9' 10'' (2,990 mm)	
H	Tail swing radius	5' 10'' (1,780 mm)	
I	Counterweight ground clearance	3' 4'' (1,010 mm)	
J	Overall height of cab	9' 9'' (2,980 mm)	
	Height of cab including lighting halo	10' (3,060 mm)	
	Height of cab including top guard	10' 3'' (3,120 mm)	
K	Min. ground clearance	1' 7'' (470 mm)	
L	Track shoe width, standard	32'' (800 mm)	

BOOM

Boom	18' 9'' (5,710 mm)
Length (A)	19' 4'' (5,898 mm)
Height (B)	5' 4" (1,630 mm)
Width	2' 7" (788 mm)
Weight	4,674 lb (2,120 kg)

STICK

Stick	9' 7" (2,915 mm)	7' 10" (2,400 mm)
Length (A)	12' 10" (3,918 mm)	11' 1" (3,375 mm)
Height (B)	2' 9" (826 mm)	2' 8" (820 mm)
Width	1' 7" (476 mm)	1' 7" (476 mm)
Weight	2,458 lb (1,115 kg)	2,271 lb (1,030 kg)

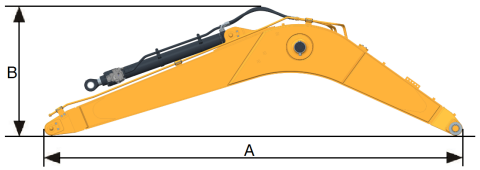

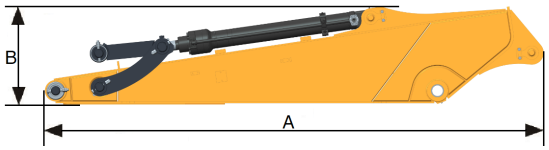

Specifications and designs are subject to change without notice.
Machines shown may include optional equipment.

LiuGong Construction Machinery N.A., LLC.
22220 Merchants Way - Suite 100
Katy, TX 77449
USA
T: 281-579-8882
www.liugongna.com
F: 281-579-8388

SPECIFICATIONS

925FCR WEIGHTS AND GROUND PRESSURE

Operating weight, including 18' 9" (5,710 mm) boom, 9' 7'' (2,915 mm) stick, 1.3 yd^3 (1.0 m^3) bucket, 14,110 lb (6,400 kg) counterweight

Shoe width (in/mm)	Operating weight (lb/kg)	Ground pressure (psi/kPa)	Overall width (in/mm)
24'' (600 mm)	56,880 lb (25,800 kg)	7.8 psi (53.7 kPa)	9' 10" (2,990 mm)
28'' (700 mm)	57,760 lb (26,200 kg)	6.8 psi (46.7 kPa)	10' 2" (3,090 mm)
32' (800 mm)	58,420 lb (26,500 kg)	6.0 psi (41.4 kPa)	10' 6" (3,190 mm)
35'' (900 mm)	58,750 lb (26,650 kg)	5.4 psi (37.0 kPa)	10' 10" (3,290 mm)

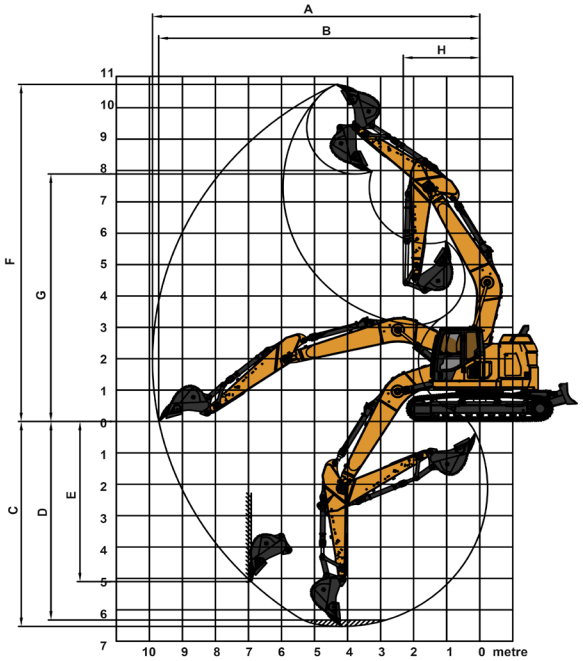

WORKING RANGES

	Boom		18' 9'' (5,710 mm)	
	Stick		7' 10'' (2,400 mm)	9' 7'' (2,915 mm)
A	Max. digging reach		31' 3'' (9,530 mm)	32' 6'' (9,906 mm)
B	Max. digging reach at ground level		30' 9'' (9,360 mm)	31' 11'' (9,720 mm)
C	Max. digging depth		20' 6'' (6,250 mm)	21' 5'' (6,530 mm)
D	Max. digging depth, 2.5m (8') level		19' 10'' (6,050 mm)	20' 9'' (6,330 mm)
E	Max. vertical wall digging depth		17' (5,175 mm)	16' 9'' (5,100 mm)
F	Max. cutting height		32' 2'' (9,810 mm)	35' 3'' (10,740 mm)
G	Max. dumping height		23' (7,010 mm)	25' 11'' (7,890 mm)
H	Min. front swing radius		10' 6'' (3,210 mm)	7' 7'' (2,310 mm)
	Bucket digging force (ISO)	Normal	31,480 lbf (140 kN)	31,480 lbf (140 kN)
		Power Boost	34,400 lbf (153 kN)	34,400 lbf (153 kN)
	Stick digging force (ISO)	Normal	26,080 lbf (116 kN)	21,800 lbf (97 kN)
		Power Boost	28,330 lbf (126 kN)	23,610 lbf (105 kN)
	Bucket capacity		1.3 yd^3 (1.0 m^3)	1.3 yd^3 (1.0 m^3)
	Bucket tip radius		4' 10'' (1,478 mm)	4' 10'' (1,478 mm)

Specifications and designs are subject to change without notice.
Machines shown may include optional equipment.

LiuGong Construction Machinery N.A., LLC.
22220 Merchants Way - Suite 100
Katy, TX 77449
USA

T: 281-579-8882
www.liugongna.com

F: 281-579-8388

SPECIFICATIONS

925FCR BUCKET SELECTION GUIDE

Attachment	Capacity		Cutting Width		Weight		Teeth	Max. Material Density	
	Metric	Imperial	Metric	Imperial	Metric	Imperial	EA	18'9" Boom	
	m^3	yd^3	mm	in	kg	lb		9'7" (2,915 mm) Stick	7'10" (2,400 mm) Stick
Standard earth-moving bucket	0.9	1.2	1,140	45''	734	1,618	5	B	B
Standard earth-moving bucket	1.0	1.3	1,220	48''	789	1,739	5	B	B
Standard earth-moving bucket	1.1	1.4	1,290	51''	816	1,799	5	B	B
Standard earth-moving bucket	1.2	1.6	1,400	55''	791	1,744	5	B	B
General purpose bucket	1.0	1.3	1,200	47''	859	1,894	5	C	C
General purpose bucket	1.1	1.4	1,260	50"	896	1,975	5	C	C
Heavy duty loading bucket	1.0	1.3	1,300	51"	1,015	2,238	5	D	D
Heavy duty loading bucket	1.1	1.4	1,370	54"	1,060	2,337	5	D	D

Maximum material density:

A. 2,023-2,191 lb/yd³ (1,200-1,300 kg/m³): coal, caliche and shale

B. 2,360-2,697 lb/yd³ (1,400-1,600 kg/m³) : wet earth and clay, limestone and sandstone

C. 2,865-3,034 lb/yd³ (1,700-1,800 kg/m³) : granite, wet sand and well blasted rock

D. 3,203 lb/yd³ (1,900 kg/m³): wet mud and iron ore

NA. Not applicable

Specifications and designs are subject to change without notice.
Machines shown may include optional equipment.

LiuGong Construction Machinery N.A., LLC.
22220 Merchants Way - Suite 100
Katy, TX 77449
USA

T: 281-579-8882
www.liugongna.com

F: 281-579-8388

SPECIFICATIONS

A: Reach from swing center
B: Stick-to-bucket pin height
C: Lifting capacity
Cf: Rating over front
Cs: Rating over side

Cf

Cs

Conditions:
Boom length: 18' 9"
Stick length: 9' 7"
Shoes:
24" triple grouser shoes
Unit: lb
Bucket: None
Blade: Yes

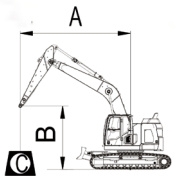

1. Do not attempt to lift or hold any load that is greater than these rated values at their specified load radius and height. Weight of all accessories must be deducted from the above lifting capacities.
2. The rated loads are in compliance with ISO 10567 Hydraulic Excavator Lift Capacity Rating Standard. They do not exceed 87% of hydraulic lifting capacity or 75% up tipping load.
3. Ratings are at the bucket to stick pin centerline.
4. Lifting capacities are based on machines set on level, firm and uniform ground.
5. *Indicates the load is limited by hydraulic capacity rather than tipping capacity.
6. Operator should be fully acquainted with the Operation and Maintenance Manual and Maintenance Instructions before operating this machine. Rules for the safe operation of equipment should be adhered to at all times.

925FCR

A (Blade down)													
B (ft-in)	9' 10"		14' 9"		19' 8"		24' 7"		26' 4"		Max Reach		
	Cf	Cs	Cf	Cs	Cf	Cs	Cf	Cs	Cf	Cs	Cf	Cs	A (ft)
24' 7"			*9,680	*9,680	*10,170	*10,170					*8,840	*8,840	**20**
19' 8"			*10,670	*10,670	*10,690	*10,690					*8,360	8,180	**24**
14' 9"	*17,520	*17,520	*13,620	*13,620	*12,000	10,910	*11,350	7,720			*7,950	6,930	**26**
9' 10"			*17,910	15,490	*14,000	10,310	*12,250	7,460	*11,940	6,770	*8,820	6,390	**27**
4' 11"			*21,860	14,320	*16,050	9,740	*13,300	7,190	*12,730	6,570	*8,880	6,120	**28**
GROUND LEVEL	*13,760	*13,760	*24,040	13,720	*17,540	9,360	*14,110	6,990	*13,300	6,430	*9,670	6,220	**27**
-4' 11"	*23,080	*23,080	*24,430	13,590	*18,070	9,220	*14,200	6,950			*13,760	6,840	**25**
-9' 10"	*33,050	26,090	*23,130	13,790	*17,200	9,340					*14,660	8,020	**22**

925FCR

A (Blade up)													
B (ft-in)	9' 10"		14' 9"		19' 8"		24' 7"		26' 4"		Max Reach		
	Cf	Cs	Cf	Cs	Cf	Cs	Cf	Cs	Cf	Cs	Cf	Cs	A (ft)
24' 7"			*9,680	*9,680	*10,170	*10,170					*8,840	*8,840	**20**
19' 8"			*10,670	*10,670	*10,690	*10,690					*8,360	8,180	**24**
14' 9"	*17,520	*17,520	*13,620	*13,620	*12,000	10,910	*11,350	7,720			*7,950	6,930	**26**
9' 10"			*17,910	15,490	*14,000	10,310	*12,250	7,460	*11,940	6,770	*8,820	6,390	**27**
4' 11"			*21,860	14,320	*16,050	9,740	12,950	7,190	11,800	6,570	*8,880	6,120	**28**
GROUND LEVEL	*13,760	*13,760	*24,040	13,720	17,520	9,360	12,730	6,990	11,640	6,430	*9,670	6,220	**27**
-4' 11"	*23,080	*23,080	*24,430	13,590	17,360	9,220	12,690	6,950			12,470	6,840	**25**
-9' 10"	*33,050	26,090	*23,130	13,790	*17,200	9,340					*14,660	8,020	**22**

Specifications and designs are subject to change without notice.
Machines shown may include optional equipment.

LiuGong Construction Machinery N.A., LLC.
22220 Merchants Way - Suite 100
Katy, TX 77449
USA
T: 281-579-8882
www.liugongna.com
F: 281-579-8388

SPECIFICATIONS

A: Reach from swing center
B: Stick-to-bucket pin height
C: Lifting capacity
Cf: Rating over front
Cs: Rating over side

Cf

Cs

Conditions:
Boom length: 5,710 mm
Stick length: 2,915 mm
Shoes:
600 mm triple grouser shoes
Unit: lb
Bucket: None
Blade: Yes

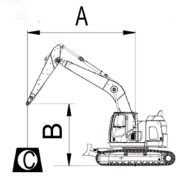

1. Do not attempt to lift or hold any load that is greater than these rated values at their specified load radius and height. Weight of all accessories must be deducted from the above lifting capacities.
2. The rated loads are in compliance with ISO 10567 Hydraulic Excavator Lift Capacity Rating Standard. They do not exceed 87% of hydraulic lifting capacity or 75% up tipping load.
3. Ratings are at the bucket to stick pin centerline.
4. Lifting capacities are based on machines set on level, firm and uniform ground.
5. *Indicates the load is limited by hydraulic capacity rather than tipping capacity.
6. Operator should be fully acquainted with the Operation and Maintenance Manual and Maintenance Instructions before operating this machine. Rules for the safe operation of equipment should be adhered to at all times.

925FCR

A (Blade down)													
B (ft)	3		4.5		6		7.5		8		Max Reach		
	Cf	Cs	Cf	Cs	Cf	Cs	Cf	Cs	Cf	Cs	Cf	Cs	A (ft)
7.5			*4,390	*4,390	*4,620	*4,620					*4,010	*4,010	**6.2**
6			*4,840	*4,840	*4,850	*4,850					*3,790	3,710	**7.3**
4.5	*7,950	*7,950	*6,180	*6,180	*5,440	4,950	*5,150	3,500			*3,610	3,140	**8.0**
3			*8,130	7,030	*6,350	4,680	*5,560	3,390	*5,410	3,070	*4,000	2,900	**8.3**
1.5			*9,920	6,490	*7,280	4,420	*6,040	3,260	*5,770	2,980	*4,030	2,780	**8.4**
GROUND LEVEL	*6,240	*6,240	*10,900	6,220	*7,960	4,250	*6,400	3,170	*6,030	2,920	*4,390	2,820	**8.2**
-1.5	*10,470	*10,470	*11,080	6,160	*8,200	4,180	*6,440	3,150			*6,240	3,100	**7.6**
-3	*14,990	11,830	*10,490	6,260	*7,800	4,240					*6,650	3,640	**6.8**

925FCR

A (Blade up)													
B (ft)	3		4.5		6		7.5		8		Max Reach		
	Cf	Cs	Cf	Cs	Cf	Cs	Cf	Cs	Cf	Cs	Cf	Cs	A (ft)
7.5			*4,390	*4,390	*4,620	*4,620					*4,010	*4,010	**6.2**
6			*4,840	*4,840	*4,850	*4,850					*3,790	3,710	**7.3**
4.5	*7,950	*7,950	*6,180	*6,180	*5,440	4,950	*5,150	3,500			*3,610	3,140	**8.0**
3			*8,130	7,030	*6,350	4,680	*5,560	3,390	*5,410	3,070	*4,000	2,900	**8.3**
1.5			*9,920	6,490	*7,280	4,420	5,870	3,260	5,350	2,980	*4,030	2,780	**8.4**
GROUND LEVEL	*6,240	*6,240	*10,900	6,220	*7,960	4,250	5,770	3,170	5,280	2,920	*4,390	2,820	**8.2**
-1.5	*10,470	*10,470	*11,080	6,160	7,870	4,180	5,760	3,150			5,660	3,100	**7.6**
-3	*14,990	11,830	*10,490	6,260	*7,800	4,240					*6,650	3,640	**6.8**

Specifications and designs are subject to change without notice.
Machines shown may include optional equipment.

LiuGong Construction Machinery N.A., LLC.
22220 Merchants Way - Suite 100
Katy, TX 77449
USA
T: 281-579-8882
www.liugongna.com
F: 281-579-8388

SPECIFICATIONS

925FCR STANDARD EQUIPMENT

ENGINE SYSTEM	• Cummins B6.7 engine, EPA Tier 4F/EU Stage V, turbocharged, 6 cylinders, 4-stroke, water-cooled.
	• Engine overheat prevention system
	• Auto-idle speed control
	• Automatic engine shutdown
	• Air filter with integrated pre-cleaner
	• Steel fuel tank
	• Fuel pre-filter with water separator and water detection
	• Electric fuel lifting pump
	• Remote engine oil filter
	• Dual engine oil dipsticks
	• 6 x reversible electric cooling fans
	• Radiator chaff screens
	• A/C compressor belt automatic tensioner
	• Cold starting kit for -4° F/-20°C
	• Electric refueling pump with auto shutoff
HYDRAULIC SYSTEM	• Electro-hydraulic joystick controls
	• 3-power modes (Power, Standard, Economy)
	• Power boost function (automatic or manual)
	• Pilot control shut-off lever
	• Pilot accumulator
	• Automatic swing parking brake
	• Swing with anti-reverse function
	• Boom and stick regeneration circuits
	• Emergency boom lowering device
	• Two-speed travel with automatic kickdown
	• Automatic travel parking brake
	• • Automatic hydraulic system warm-up
	• Electro-hydraulic, primary auxiliary circuit with monitor-controlled one-way or two-way flow
	• Electro-hydraulic, second auxiliary circuit with monitor-controlled pressure & flow adjustments

925FCR STANDARD EQUIPMENT

HYDRAULIC SYSTEM	• High pressure quick-coupler pipes
	• Motorized attachment case drain-to-tank line
	• Additional filter for breaker operation
	• Monitor-controlled SAE/ISO control pattern selection
	• Boom float feature
	• Straight travel with one pedal
OPERATOR STATION	• Sealed and pressurized cab with 68 dB(a) interior sound levels
	• ROPS certified cab
	• Removeable lower windshield
	• Front windshield with overhead stowage
	• Transparent cab skylight
	• Sunscreen
	• Front window rain visor
	• Large roof window with sliding sun shield
	• Air suspension deluxe seat (with heater and head rest) with red, 3-inch (75 mm) retractable seat belt
	• 10-inch, high resolution LCD touch screen with integrated control panel
	• In-monitor, automatic air conditioner & heater with defrost
	• Washable floor mat
	• Safety glass hammer for emergency
	• Machine manual storage
	• Cup holder
	• Document holding space
	• Green safety glass
	• Sliding right-side window
	• Cab interior lighting
	• Tilt-up left side console

Specifications and designs are subject to change without notice.
Machines shown may include optional equipment.

LiuGong Construction Machinery N.A., LLC.
22220 Merchants Way - Suite 100
Katy, TX 77449
USA
T: 281-579-8882
www.liugongna.com
F: 281-579-8388

SPECIFICATIONS

925FCR STANDARD EQUIPMENT

ELECTRICAL SYSTEM	• Monitor: working modes, service hours, water temperature, oil temperature, fuel level, DEF level, fuel consumption, rear camera, fault codes, attachment settings, diagnostic mode, machine system monitors, preventative maintenance reminders
	• Warnings: low engine oil pressure, low fuel level, air filter service, coolant & hydraulic overheating, maintenance reminders
	• Front window wiper with adjustable intermittent feature
	• Bluetooth/ AM/FM radio with auxiliary input
	• Selectable, password proteced start code
	• Shut-off delay timer for cab and work lights
	• 2 stereo speakers
	• 2 signaling/warning horns
	• Battery disconnect switch
	• Emergency secondary engine stop at ground level
	• Password protection for auxiliary hydraulic flow adjustments
	• Travel alarm
	• Rotating beacon
	• 4 boom working lights
	• Separately installed LED work lights, 4 in front & 2 in rear on cab roof
	• 360° view
	• Quick coupler unlocked warning
UNDERCARRIAGE	• Standard track undercover
	• 32'' (800mm) track-shoes with triple grousers
	• Rollers, bottom - 8 each side
	• Rollers, top - 2 each side
	• 3 piece track guards (each side)
	• Centralized lubrication for swing bearing
	• Towing eye on base frame
	• Traction hole

925FCR STANDARD EQUIPMENT

UPPER STRUCTURE	• Upper frame side handrail
	• Anti-slip tread plates
	• Lockable tool box
	• Steel wall separation between engine & main pump chambers
	• Standard frame undercover
	• Automatically locking side door brace
	• Right-hand cab mounted mirror
	• Left-hand cab mounted mirror
	• 6,400 kg (14,110 lbs) counterweight
DIGGING EQUIPMENT	• Bucket linkage with lifting eye
	• 1.3 yd^3 (1.0 m^3) general purpose bucket
	• 18'9'' (5,710 mm) boom
	• 9'7'' (2,915 mm) stick
	• Underside clamping protection plates for stick
	• Manual centralized lubrication on boom
	• Manual centralized lubrication on stick
SERVICE & MAINTENANCE	• System pressure test port for main pump
	• Data diagnostic port
	• Self-diagnostic system
	• Telematics system
	• Long-life hydraulic oil (replacement cycle 5,000 hours)

Specifications and designs are subject to change without notice.
Machines shown may include optional equipment.

LiuGong Construction Machinery N.A., LLC.
22220 Merchants Way - Suite 100
Katy, TX 77449
USA
T: 281-579-8882
www.liugongna.com
F: 281-579-8388

SPECIFICATIONS

925FCR OPTIONAL EQUIPMENT

ENGINE SYSTEM	• Cold starting kit for -31° F/-35°C
HYDRAULIC SYSTEM	• Boom and stick holding valves
	• Bucket cylinder rod protect
OPERATOR STATION	• Openable cab front guard
	• Cab front guard and top guard (Operator Protection Guards)
	• Openable cab front window mesh guard
ELECTRICAL SYSTEM	• Long strip LED work lights on cab roof in front and rear
	• 2 alarm mounted bracket on cab roof
	• Overload warning device
UNDERCARRIAGE	• 24'' (600mm) track-shoes with triple grousers
	• 28'' (700mm) track-shoes with triple grousers
	• 35'' (900mm) track-shoes with triple grousers
	• Additional track step
	• Full length track guard
	• Dozer with safety valve

925FCR OPTIONAL EQUIPMENT

UPPER STRUCTURE	• Upper frame guard rails
DIGGING EQUIPMENT	• 7'10'' (2,400mm) short reach stick
	• 1.2 yd^3 (0.9 m^3) standard earth-moving bucket
	• 1.3 yd^3 (1.0 m^3) standard earth-moving bucket
	• 1.4 yd^3 (1.1 m^3) standard earth-moving bucket
	• 1.6 yd^3 (1.2 m^3) standard earth-moving bucket
	• 1.3 yd^3 (1.0 m^3) general purpose bucket
	• 1.4 yd^3 (1.1 m^3) general purpose bucket
	• 1.3 yd^3 (1.0 m^3) heavy duty loading bucket
	• 1.4 yd^3 (1.1 m^3) heavy duty loading bucket
SERVICE & MAINTENANCE	• Maintenance tool kit
	• Maintenance parts package

Specifications and designs are subject to change without notice.
Machines shown may include optional equipment.

LiuGong Construction Machinery N.A., LLC.
22220 Merchants Way - Suite 100
Katy, TX 77449
USA
T: 281-579-8882
www.liugongna.com
F: 281-579-8388